American Psychologist

Selected Article

American Psychologist, September 1998, Vol. 53, No. 9, 1017–1031

© 1998 by the American Psychological Association

For personal use only—not for distribution

Internet Paradox

A Social Technology That Reduces Social Involvement and Psychological Well-Being?

Robert Kraut and Vicki Lundmark

Human Computer Interaction Institute

Carnegie Mellon University

Michael Patterson and Sara Kiesler

Social and Decision Science Department

Carnegie Mellon University

Tridas Mukopadhyay

Graduate School of Industrial Administration

Carnegie Mellon University

William Scherlis

Computer Science Department

Carnegie Mellon University

Abstract

The Internet could change the lives of average citizens as much as did the telephone in the early part of the 20th century and television in the

Abstract

The Internet could change the lives of average citizens as much as did the telephone in the early part of the 20th century and television in the 1950s and 1960s. Researchers and social critics are debating whether the Internet is improving or harming participation in community life and social relationships. This research examined the social and psychological impact of the Internet on 169 people in 73 households during their first 1 to 2 years on-line. We used longitudinal data to examine the effects of the Internet on social involvement and psychological well-being. In this sample, the Internet was used extensively for communication. Nonetheless, greater use of the Internet was associated with declines in participants' communication with family members in the household, declines in the size of their social circle, and increases in their depression and loneliness. These findings have implications for research, for public policy, and for the design of technology.

This research has been supported by grants from Apple Computer Inc., AT&T Research, Bell Atlantic, Bellcore, CNET, Carnegie Mellon University's Information Networking Institute, Intel Corporation, Interval Research Corporation, Hewlett Packard Corporation, Lotus Development Corporation, the Markle Foundation, the National Science Foundation (Grants IRI-9408271 and DSG-9354995), the NPD Group, Nippon Telegraph and Telephone Corporation (NTT), Panasonic Technologies, the U.S. Postal Service, and U.S. West Advanced Technologies. Farallon Computing and Netscape Communications provided software. Steven Klepper provided valuable statistical advice. We also thank Robert Putnam and Lee Sproull for comments on the article.
Correspondence may be addressed to Robert Kraut, Human Computer Interaction Institute, Carnegie Mellon University, 5000 Forbes Avenue, Pittsburgh, PA, 15217.
Electronic mail may be sent to robert.kraut@cmu.edu

Fifteen years ago, computers were mainly the province of science, engineering, and business. By 1998, approximately 40% of all U.S. households owned a personal computer; roughly one third of these homes had access to the Internet. Many scholars, technologists, and social critics believe that these changes and the Internet, in particular, are transforming economic and social life (e.g., Anderson, Bikson, Law, & Mitchell, 1995; Attewell & Rule, 1984; King & Kraemer, 1995). However, analysts disagree as to the nature of these changes and

whether the changes are for the better or worse. Some scholars argue that the Internet is causing people to become socially isolated and cut off from genuine social relationships, as they hunker alone over their terminals or communicate with anonymous strangers through a socially impoverished medium (e.g., Stoll, 1995; Turkle, 1996). Others argue that the Internet leads to more and better social relationships by freeing people from the constraints of geography or isolation brought on by stigma, illness, or schedule. According to them, the Internet allows people to join groups on the basis of common interests rather than convenience (e.g., Katz & Aspden, 1997; Rheingold, 1993).

Arguments based on the attributes of the technology alone do not resolve this debate. People can use home computers and the Internet in many different ways and for many purposes, including entertainment, education, information retrieval, and communication. If people use the Internet mainly for communication with others through email, distribution lists, multiuser dungeons (MUDs), chats, and other such applications, they might do so to augment traditional technologies for social contact, expanding their number of friends and reducing the difficulty of coordinating interaction with them. On the other hand, these applications disproportionately reduce the costs of communication with geographically distant acquaintances and strangers; as a result, a smaller proportion of people's total social contacts might be with family and close friends. Other applications on the Internet, particularly the World Wide Web, provide asocial entertainment that could compete with social contact as a way for people to spend their time.

Whether the Internet is increasing or decreasing social involvement could have enormous consequences for society and for people's personal well-being. In an influential article, Putnam (1995) documented a broad decline in civic engagement and social participation in the United States over the past 35 years. Citizens vote less, go to church less, discuss government with their neighbors less, are members of fewer voluntary organizations, have fewer dinner parties, and generally get together less for civic and social purposes. Putnam argued that this social disengagement is having major consequences for the social fabric and

for individual lives. At the societal level, social disengagement is associated with more corrupt, less efficient government and more crime. When citizens are involved in civic life, their schools run better, their politicians are more responsive, and their streets are safer. At the individual level, social disengagement is associated with poor quality of life and diminished physical and psychological health. When people have more social contact, they are happier and healthier, both physically and mentally (e.g., S. Cohen & Wills, 1985; Gove & Geerken, 1977).

Although changes in the labor force participation of women and marital breakup may account for some of the declines in social participation and increases in depression since the 1960s, technological change may also play a role. Television, an earlier technology similar to the Internet in some respects, may have reduced social participation as it kept people home watching the set. By contrast, other household technologies, in particular, the telephone, are used to enhance social participation, not discourage it (Fischer, 1992). The home computer and the Internet are too new and, until recently, were too thinly diffused into American households to explain social trends that originated over 35 years, but, now, they could either exacerbate or ameliorate these trends, depending on how they are used.

The goal of this article is to examine these issues and to report early empirical results of a field trial of Internet use. We show that within a diverse sample during their first year or two on-line, participants' Internet use led to their having, on balance, less social engagement and poorer psychological well-being. We discuss research that will be needed to assess the generality of the effects we have observed and to track down the mechanisms that produce them. We also discuss design and policy implications of these results, should they prove stable.

Current Debate

Since the introduction of computing into society, scholars and technologists have pondered its possible social impact (e.g., Bell, 1973; Jacobson & Roucek, 1959; Leavitt & Whisler, 1958; Short, Williams, & Christie, 1976). With its rapid evolution, large numbers of applications, wealth of information sources, and

global reach to homes, the Internet has added even more uncertainty. People could use the Internet to further privatize entertainment (as they have purportedly done with television), to obtain previously inaccessible information, to increase their technical skills, and to conduct commercial transactions at home-each are somewhat asocial functions that would make it easier for people to be alone and to be independent. Alternatively, people could use the Internet for more social purposes, to communicate and socialize with colleagues, friends, and family through electronic mail and to join social groups through distribution lists, newsgroups, and MUDs (Sproull & Faraj, 1995).

Internet for Entertainment, Information, and Commerce

If people use the Internet primarily for entertainment and information, the Internet's social effects might resemble those of television. Most research on the social impact of television has focused on its content; this research has investigated the effects of TV violence, educational content, gender stereotypes, racial stereotypes, advertising, and portrayals of family life, among other topics (Huston et al., 1992). Some social critics have argued that television reinforces sociability and social bonds (Beniger, 1987 , pp. 356-362; McLuhan, 1964 , p. 304). One study comparing Australian towns before and after television became available suggests that the arrival of television led to increases in social activity (Murray & Kippax, 1978). However most empirical work has indicated that television watching reduces social involvement (Brody, 1990; Jackson-Beeck & Robinson, 1981; Neuman, 1991; Maccoby, 1951). Recent epidemiological research has linked television watching with reduced physical activity and diminished physical and mental health (Andersen, Crespo, Bartlett, Cheskin, & Pratt, 1998; Sidney et al., 1998).

If watching television does indeed lead to a decline in social participation and psychological well-being, the most plausible explanation faults time displacement. That is, the time people spend watching TV is time they are not actively socially engaged. Basing their estimates on detailed time diaries, Robinson and Godbey (1997; see also Robinson, 1990) reported that a typical American adult spends three hours each day watching TV; children's TV

watching is much higher (Condry, 1993). Although a large percentage of TV watching occurs in the presence of others, the quality of social interaction among TV viewers is low. People who report they are energetic and happy when they are engaged in active social interaction also report they are bored and unhappy when they are watching TV (Kubey & Csikszentmihalyi, 1990). Lonely people report watching TV more than others (Canary & Spitzberg, 1993), and people report using TV to alleviate loneliness (Rubinstein & Shaver, 1982; Rook & Peplau, 1982). Although we cannot disentangle the direction of causation in this cross-sectional research, a plausible hypothesis is that watching TV causes both social disengagement and worsening of mood.

Like watching television, using a home computer and the Internet generally imply physical inactivity and limited face-to-face social interaction. Some studies, including our own, have indicated that using a home computer and the Internet can lead to increased skills and confidence with computers (Lundmark, Kiesler, Kraut, Scherlis, & Mukopadhyay, 1998). However, when people use these technologies intensively for learning new software, playing computer games, or retrieving electronic information, they consume time and may spend more time alone (Vitalari, Venkatesh, & Gronhaug, 1985). Some cross-sectional research suggests that home computing may be displacing television watching itself (Danko & McLachlan, 1983; Kohut, 1994) as well as reducing leisure time with the family (Vitalari et al., 1985).

Internet for Interpersonal Communication

The Internet, like its network predecessors (Sproull & Kiesler, 1991), has turned out to be far more social than television, and in this respect, the impact of the Internet may be more like that of the telephone than of TV. Our research has shown that interpersonal communication is the dominant use of the Internet at home (Kraut, Mukhopadhyay, Szczypula, Kiesler, & Scherlis, 1998). That people use the Internet mainly for interpersonal communication, however, does not imply that their social interactions and relationships on the Internet are the same as their traditional social interactions and relationships (Sproull & Kiesler, 1991), or

that their social uses of the Internet will have effects comparable to traditional social activity.

Whether social uses of the Internet have positive or negative effects may depend on how the Internet shapes the balance of strong and weak network ties that people maintain. Strong ties are relationships associated with frequent contact, deep feelings of affection and obligation, and application to a broad content domain, whereas weak ties are relationships with superficial and easily broken bonds, infrequent contact, and narrow focus. Strong and weak ties alike provide people with social support. Weak ties (Granovetter, 1973), including weak on-line ties (Constant, Sproull, & Kiesler, 1996), are especially useful for linking people to information and social resources unavailable in people's closest, local groups. Nonetheless, strong social ties are the relationships that generally buffer people from life's stresses and that lead to better social and psychological outcomes (S. Cohen & Wills, 1985; Krackhardt, 1994). People receive most of their social support from people with whom they are in most frequent contact, and bigger favors come from those with stronger ties (Wellman & Wortley, 1990).

Generally, strong personal ties are supported by physical proximity. The Internet potentially reduces the importance of physical proximity in creating and maintaining networks of strong social ties. Unlike face-to-face interaction or even the telephone, the Internet offers opportunities for social interaction that do not depend on the distance between parties. People often use the Internet to keep up with those whom they have preexisting relationships (Kraut et al., 1998). But they also develop new relationships on-line. Most of these new relationships are weak. MUDs, listservs, newsgroups, and chat rooms put people in contact with a pool of new groups, but these on-line "mixers" are typically organized around specific topics, activities, or demographics and rarely revolve around local community and close family and friends.

Whether a typical relationship developed on-line becomes as strong as a typical traditional relationship and whether having on-line relationships changes the number or quality of a person's total social involvements are open questions.

Empirical evidence about the impact of the Internet on relationships and social involvement is sparse. Many authors have debated whether the Internet will promote community or undercut it (e.g., Rheingold, 1993; Stoll, 1995; Turkle, 1996) and whether personal relationships that are formed on-line are impersonal or as close and substantial as those sustained through face-to-face interaction (Berry, 1993; Heim, 1992; Walther, Anderson, & Park, 1994). Much of this discussion has been speculative and anecdotal, or is based on cross-sectional data with small samples.

Current Data

Katz and Aspden's national survey (1997) is one of the few empirical studies that has compared the social participation of Internet users with nonusers. Controlling statistically for education, race, and other demographic variables, these researchers found no differences between Internet users' and nonusers' memberships in religious, leisure, and community organizations or in the amount of time users and nonusers reported spending communicating with family and friends. From these data, Katz and Aspden concluded that "[f]ar from creating a nation of strangers, the Internet is creating a nation richer in friendships and social relationships" (p. 86).

Katz and Aspden's (1997) conclusions may be premature because they used potentially inaccurate, self-report measures of Internet usage and social participation that are probably too insensitive to detect gradual changes over time. Furthermore, their observation that people have friendships on-line does not necessarily lead to the inference that using the Internet increases people's social participation or psychological well-being; to draw such a conclusion, one needs to know more about the quality of their on-line relationships and the impact on their off-line relationships. Many studies show unequivocally that people can and do form on-line social relationships (e.g., Parks & Floyd, 1995). However, these data do not speak to the frequency, depth, and impact of on-line relationships compared with traditional ones or whether the existence of on-line relationships changes traditional relationships or the balance of people's strong and weak ties.

Even if a cross-sectional survey were to convincingly demonstrate that Internet use is associated with greater social involvement, it would not establish the causal direction of this relationship. In many cases, it is as plausible to assume that social involvement causes Internet use as the reverse. For example, many people buy a home computer to keep in touch with children in college or with retired parents. People who use the Internet differ substantially from those who do not in their demographics, skills, values, and attitudes. Statistical tests often under-control for the influence of these factors, which in turn can be associated with social involvement (Anderson et al., 1995; Kraut, Scherlis, Mukhopadhyay, Manning, & Kiesler, 1996; Kohut, 1994).

A Longitudinal Study of Internet Use

The research described here uses longitudinal data to examine the causal relationship between people's use of the Internet, their social involvement, and certain likely psychological consequences of social involvement. The data come from a field trial of Internet use, in which we tracked the behavior of 169 participants over their first one or two years of Internet use. It improves on earlier research by using accurate measures of Internet use and a panel research design. Measures of Internet use were recorded automatically, and measures of social involvement and psychological well-being were collected twice, using reliable self-report scales. Because we tracked people over time, we can observe change and control statistically for social involvement, psychological states, and demographic attributes of the trial participants that existed prior to their use of the Internet. With these statistical controls and measures of change, we can draw stronger causal conclusions than is possible in research in which the data are collected once.

Method

Sample

The HomeNet study consists of a sample of 93 families from eight diverse neighborhoods in Pittsburgh, Pennsylvania. People in these families began using a computer and the Internet at home either in March 1995 or March 1996. Within these 93 families, 256 members signed consent forms, were given email

accounts on the Internet, and logged on at least once. Children younger than 10 and uninterested members of the households are not included in the sample. Each year's subsample was drawn from four school or neighborhood groups so that the participants would have some preexisting communication and information interests in common. The first year's participants consisted of families with teenagers participating in journalism classes in four area high schools. The second year's participants consisted of families in which an adult was on the Board of Directors of one of four community development organizations. Families received a computer and software, a free telephone line, and free access to the Internet in exchange for permitting the researchers to automatically track their Internet usage and services, for answering periodic questionnaires, and for agreeing to an in-home interview. The families used Carnegie Mellon University's proprietary software for electronic mail, MacMail II, Netscape Navigator 2 or 3 for web browsing, and ClarisWorks Office. At least two family members also received a morning's training in the use of the computer, electronic mail, and the World Wide Web.

None of the groups approached about the study declined the invitation, and over 90% of the families contacted within each group agreed to participate. Because the recruitment plan excluded households or individuals with active Internet connections, the data represent people's first experiences with Internet use, and for all but a few of the households, their first experience with a powerful home computer.

Some participants left the study to attend college, because they moved, or for other reasons. Of the 256 individuals who completed the pretest questionnaire, 169 (66%) from 73 households also completed the follow-up questionnaire. Table 1 provides descriptive statistics on the sample that completed both a pretest and posttest questionnaire. Compared with participants who completed only the pretest questionnaire, participants who completed both were wealthier ($53,300 vs. $43,600 annual household income, $r = .20$, $p < .01$), more likely to be adults

(74% vs. 55%, r = .16, *p <.01),* and less lonely (1.98 vs. 2.20 on a 5-point scale, r = -.13, *p <.05). They did not differ on other measures.*

Because estimates of communication within the family were based on reports from multiple family members, we have data for 231 individuals for this measure.

Data Collection

We measured demographic characteristics, social involvement, and psychological well-being of participants in the HomeNet trial on a pretest questionnaire, before the participants were given access to the Internet. After 12 to 24 months, participants completed a follow-up questionnaire containing the measures of social involvement and psychological well-being. During this interval, we automatically recorded their Internet usage using custom-designed logging programs. The data reported here encompass the first 104 weeks of use after a HomeNet family's Internet account was first operational for the 1995 subsample and 52 weeks of use for the 1996 subsample.

Demographic and control variables. In previous analyses of this sample, we found that the demographic factors of age, gender, and race were associated empirically with Internet usage (Kraut et al., 1998). Others have reported that household income is associated with Internet usage (Anderson et al., 1995). We used those demographic factors as control variables in our equations. Also, as a control variable that might influence participants' family communication, social network, social support, and loneliness, we included a measure of social extraversion in those analyses (e.g., "I like to mix socially with people"; Bendig, 1962). A few other controls used in single analyses are described below.

Internet usage. Software recorded the total hours in a week in which a participant connected to the Internet. Electronic mail and the World Wide Web were the major applications that participants used on the Internet and account for most of their time on-line. Internet hours also included time that participants read distribution lists such as listservs or Usenet newsgroups and participated in real-time communication using Web chat lines, MUDs, and Internet Relay Chat. For the analyses we report here, we averaged weekly Internet hours over the period in which each participant had access to the Internet, from the pretest up to the

time he or she completed the follow-up questionnaire. Our analyses use the log of the variable to normalize the distribution.

Personal electronic mail use. We recorded the number of e-mail messages participants sent and received. To better distinguish the use of the Internet for interpersonal communication rather than for information and entertainment, we excluded e-mail messages in which the participant was not explicitly named as a recipient in our count of received mail. These messages typically had been broadcast to a distribution list to which the participant had subscribed. We believe these messages reflect a mix of interpersonal communication and information distribution.

World Wide Web use. We recorded the number of unique World Wide Web domains or sites accessed per week (a domain or site is an Internet protocol address, such as www.disney.com). Our metric for total volume of World Wide Web use is the number of different domains accessed during the week. The average number of weekly domains visited and the average number of weekly hypertext mark-up language (html) pages retrieved were very highly correlated (r = .96).

Social involvement and psychological wellbeing. Before participants gained access to the Internet and again (depending on sample) approximately 12 to 24 months later, they completed questionnaires assessing their social involvement and psychological well-being. We used four measures of social involvement: family communication, size of local social network, size of distant social network, and social support. To measure family communication, we asked participants to list all the members of their household and to estimate the number of minutes they spent each day communicating with each member. Pairs reported similar estimates (r = .73), and their estimates were averaged. The total amount of family communication for each participant is the sum of the minutes communicating with other family members. Extreme values (greater than 400 minutes) were truncated to 400 minutes. Because the measure was skewed, we took its log in the analyses that follow, to make the distribution more normal.

Family communication is partly determined by the number of family members and is interdependent within households, so we controlled statistically for these group effects by including family as a dummy variable in the analyses involving family communication.

To measure the size of participants' local social network, we asked them to estimate the "the number of people in the Pittsburgh area . . . whom you socialize with at least once a month." The size of their distant social network was defined as "the number of people outside of the Pittsburgh area whom you seek out to talk with or to visit at least once a year." Because both measures had some outliers, they were truncated (at 60 for the local circle and 100 for the distant circle); because they were skewed, we took their log in the analyses that follow.

Social support is a self-report measure of social resources that theoretically derive from the social network. To measure participants' levels of social support, we asked them to complete 16 items from S. Cohen, Mermelstein, Kamarck, and Hoberman's (1984) Interpersonal Support Evaluation List (Cronbach's α = .80), which asks people to report how easy it is to get tangible help, advice, emotional support, and companionship, and how much they get a sense of belonging from people around them (e.g., "There is someone I could turn to for advice about changing my job or finding a new one").

We used three measures of psychological well-being that have been associated with social involvement: loneliness, stress, and depression. Participants completed three items (Cronbach's α = .54) from the UCLA Loneliness Scale (Version 2), which asks people about their feelings of connection to others around them (e.g., "I can't find companionship when I want it" (Russell, Peplau, & Cutrona, 1980). To measure stress we used Kanner, Coyne, Schaefer, and Lazarus' (1981) Hassles Scale . Participants reported whether they experienced one or more of 49 possible daily life stressors in the preceding month; the stressors ranged from having one's car break down, to not liking school, to illness in the family. Because stress is often a trigger for depression, this measure was also included as a control variable in analyses involving depression. Participants

completed 15 items from the Center for Epidemiologic Studies Depression (CES-D; Radloff, 1977) Scale (Cronbach's α = .86) measuring depression in the general population. The scale asks respondents to report feelings, thoughts, symptoms, and energy levels associated with mild depression (e.g., "I felt that everything I did was an effort," "I felt I could not shake off the blues, even with help from family and friends").

Analysis

Our data analysis examined how changes in people's use of the Internet over 12 to 24 months was associated with changes in their social involvement and psychological well-being. We statistically controlled their initial levels of social involvement and psychological well-being, as well as certain demographic and control variables. Figure 1 describes the logic of our analysis as a path model (Bentler, 1995).

We used path analysis to test the relationships among variables measured at three time periods: pretest questionnaire at Time 1 (T1), Internet usage during Time 2 (T2), and posttest questionnaire at Time 3 (T3). The statistical associations among demographic characteristics, social involvement, and psychological well-being measured at T1 and Internet use measured at T2 provide an estimate of how much preexisting personal characteristics led people to use the Internet. The link between social involvement and psychological well-being at T1 and T3 reflects stability in involvement and well-being. Evidence that using the Internet changes social involvement and psychological well-being comes from the link between Internet use at T2 and social involvement and psychological well-being at T3. Because this analysis controls for a participant's demographic characteristics and the initial level of the outcome variables, one can interpret the coefficients associated with the link between Internet use at T2 and outcomes at T3 as the effect of Internet use on changes in social involvement and psychological well-being (J. Cohen & Cohen, 1983). By using longitudinal data, measuring Internet use over an extended period, and measuring the outcome variables at two time periods, we can evaluate the possibility that initial social involvement or psychological well-being led to Internet

use. We explicitly tested this possibility in the link between involvement and well-being at T1 and Internet use at T2; this link is controlled when we test the link between Internet use at T2 and outcome link at T3.

Results

Table 1 presents the means and standard deviations of the demographic variables, measures of Internet use, social involvement, and psychological well-being used in this study. Table 2 presents a correlation matrix showing the relationships among these variables.

All the path models are summarized in Table 3 . When these models are complex, we also show these relationships graphically, in Figures 2-4.

Social Involvement

Family communication. Figure 2 documents a path model in which the amount of time participants communicated with other members of their households is the dependent variable. Coefficients in the model are standardized beta weights showing the relationships among variables linked by arrows, when variables measured earlier have been controlled. Because communication within a single household is interdependent, we included a dummy variable for each family in the analysis. For purposes of clarity, only links with coefficients significant at the .05 level or less are included in Figure 2 , although the full set of coefficients is included in Model 1 in Table 3 .

The analysis of family communication showed that teenagers used the Internet more hours (T2) than did adults, but Whites did not differ from minorities, and female participants did not differ from male participants in their average hours of use. Different families varied in their use of the Internet (the family dummy variable), but the amount of communication that an individual family member had with other members of the family did not predict subsequent Internet use. Family communication was stable over the period from T1 to T3. Whites increased their family communication more than minorities did. Adults increased their communication more than teens, and women/girls increased their communication in the family more than men/boys did. For our purposes, the most important

finding is that greater use of the Internet was associated with subsequent declines in family communication.

Size of participants' social networks. Models 2 and 3 in Table 3 present analyses involving the size of participants' local and distant social circles, respectively. Because social extroversion may influence the number of friendships that an individual maintains and because preliminary analyses showed that more extroverted individuals subsequently used the Internet less, we included social extroversion as a control variable.

Greater social extroversion and having a larger local social circle predicted less use of the Internet during the next 12 or 24 months. Whites reported increasing their distant social circles more than minorities did, and teens reported increasing their distant circles more than adults did; these groups did not differ in changes to their local circles. Holding constant these control variables and the initial sizes of participants' social circles, greater use of the Internet was associated with subsequent declines in the size of both the local social circle ($p < .05$) and, marginally, the size of the distant social circle ($p < .07$).

Social support. The social-circle measures ask respondents to estimate the number of people with whom they can exchange social resources. However, the definition provided to participants may have focused their attention primarily on people with whom they had face-to-face contact, thus leading to a biased view of social resources if the Internet allowed for the substitution of on-line contacts for face-to-face ones. The social support and loneliness measures are more direct measures of the consequences of having social contact and are not inherently biased by the medium of communication.

The social support measure and the loneliness measure have some items with comparable content (e.g., "I can find companionship when I want it" is on the loneliness scale and "When I feel lonely, these are several people I can talk to" is on the social support scale). Also, the two measures are correlated ($r = .60$). However, whereas the loneliness scale focuses on psychological feelings of belonging, the social support scale includes components measuring the

availability of tangible resources from others (e.g., a loan), intangible resources from others (e.g., advice), and reflected esteem (e.g., respect for abilities). Model 4 in Table 3 is a path analysis in which social support was the dependent variable. We included the extroversion scale at T1 as a covariate. Although the association between Internet use and subsequent social support was negative, the effect did not approach statistical significance ($p > .40$).

Psychological Well-Being

Loneliness. Model 5 in Table 3 is the path analysis involving the loneliness scale. We included the extroversion scale at T1 as a covariate. Figure 3 summarizes the results. Note that initial loneliness did not predict subsequent Internet use. Loneliness was stable over time. People from richer households increased loneliness more than did those from poorer households, men increased loneliness more than did women, and minorities increased loneliness more than did Whites. Controlling for these personal characteristics and initial loneliness, people who used the Internet more subsequently reported larger increases in loneliness. The association of Internet use with subsequent loneliness was comparable to the associations of income, gender, and race with subsequent loneliness.

Stress. Model 6 in Table 3 describes the analysis involving self-reports of daily "hassles," an index of the extent of daily life stress. The occurrence of these stressors was stable over the interval we studied. People who used the Internet more reported experiencing a greater number of daily life stressors in a subsequent period, an increase that is marginally significant ($p = .08$). The Hassle Scale (S. Cohen et al., 1984) is a simple mean of a large number of stressors. We tried to gain more insight into the detailed changes that were occurring in participants' lives by conducting an exploratory, post hoc analysis to identify the particular stressors that increased with Internet use. We conducted separate analysis for each potential stressor, regressing it on its occurence at the pretest time and the other variables from Model 6, and we used the Bonferroni correction to guard against capitalizing on chance in reporting results. Under this analysis, no single stressor changed reliably from its baseline. The implication is

that even though use of the Internet may increase aggregate stress, it does not do so through a common route across the sample.

Depression. Model 7 in Table 3 presents the path analysis involving depression; Figure 4 shows the significant variables. Because stress often triggers depression, and social support is often a buffer protecting against depression, we included both the hassle and social support measures at T1 as covariates. The stability of depression in this sample was lower than the stability of other outcomes measured, but was comparable to its stability in other general populations (Radloff, 1977). Initial depression did not predict subsequent Internet use. Minorities reported more increases in depression than did Whites, and those with higher initial stress also reported greater increases in depression. For the purposes of this analysis, the important finding is that greater use of the Internet was associated with increased depression at a subsequent period, even holding constant initial depression and demographic, stress, and support variables that are often associated with depression. This negative association between Internet use and depression is consistent with the interpretation that use of the Internet caused an increase in depression. Again, it is noteworthy that depression at T1 did not predict using the Internet subsequently.

Discussion

Evaluating the Causal Claim

The findings of this research provide a surprisingly consistent picture of the consequences of using the Internet. Greater use of the Internet was associated with small, but statistically significant declines in social involvement as measured by communication within the family and the size of people's local social networks, and with increases in loneliness, a psychological state associated with social involvement. Greater use of the Internet was also associated with increases in depression. Other effects on the size of the distant social circle, social support, and stress did not reach standard significance levels but were consistently negative.

Our analyses are consistent with the hypothesis that using the Internet adversely affects social involvement and psychological well-being. The panel research

design gives us substantial leverage in inferring causation, leading us to believe that in this case, correlation does indeed imply causation. Initial Internet use and initial social involvement and psychological well-being were included in all of the models assessing the effects of Internet use on subsequent social and psychological outcomes. Therefore, our analysis is equivalent to an analysis of change scores, controlling for regression toward the mean, unreliability, contemporaneous covariation between the outcome and the predictor variables, and other statistical artifacts (J. Cohen & Cohen, 1983). Because initial social involvement and psychological well-being were generally not associated with subsequent use of the Internet, these findings imply that the direction of causation is more likely to run from use of the Internet to declines in social involvement and psychological well-being, rather than the reverse. The only exception to this generalization was a marginal finding that people who initially had larger local social circles were lighter users of the Internet.

The major threat to the causal claim would arise if some unmeasured factor varying over time within individuals were to simultaneously cause increases in their use of the Internet and declines in their normal levels of social involvement and psychological well-being. One such factor might be developmental changes in adolescence, which could cause teenagers to withdraw from social contact (at least from members of their families) and to use the Internet as an escape. Our data are mixed regarding this interpretation. In analyses not reported in Table 3 , statistical interactions of Internet use with age showed that increases in Internet use were associated with larger increases in loneliness ($\beta = -.16$, $p < .02$) and larger declines in social support ($\beta = -.13$, $p < .05$) for teenagers than for adults. On the other hand, increases in Internet use were associated with smaller increases in daily stress for teenagers than adults ($\beta = -.16$, $p < .02$). There were no statistical interactions between Internet use and age for family communication, depression, or size of social circle.

Although the evidence is strong that using the Internet caused declines in social participation and psychological well-being within this sample, we do not know

how generalizable the findings are across people, time, or outcomes. The sample examined here was selected to be diverse, but it was small and not statistically representative of any particular geographic region or population. In addition, the sample consisted of families with at least one member engaged in a preexisting face-to-face group (students working on a high school newspaper or adults on the board of a community development organization). If the sample had consisted of those who were already isolated (e.g., homeless or elderly people), social interaction on the Internet might have increased social participation and psychological well-being rather than decreased them.

Moreover, the sample examined people in their first one or two years on-line, starting in 1995 or 1996; whether results would have been the same at different points in their experience or at different points in the history of the Internet is unclear. Some of the teenagers, for example, reported that the Internet lost its appeal as they became immersed in the more serious work of college. The Internet itself changed during the course of this research. For example, group-oriented software, like America Online's Instant Messenger or Mirabilis' ICQ, which allow people to monitor the availability of selected individuals and to immediately swap messages with them when they go on-line, was not available during the early days of this trial.

Finally, we can generalize our results only to outcomes related to social behavior. In particular, we are not reporting effects of the Internet on educational outcomes or on self-esteem related to computer skill learning. Participants gained computer skills with more Internet usage. Several parents of teenagers who had spent many hours on-line judged that their children's positive educational outcomes from using the Internet outweighed possible declines in their children's social interaction. Future research will be needed to evaluate whether such trade-offs exist.

Possible Causal Mechanisms

To this point, we have attempted to establish the existence of a phenomenon-that Internet use causes declines in social involvement and psychological well-being. We have not, however, identified the mechanisms through which this

phenomenon occurs. There are at least two plausible and theoretically interesting mechanisms, but we have little evidence from our current research to establish which, if either, is correct.

Displacing social activity. The time that people devote to using the Internet might substitute for time that they had previously spent engaged in social activities. According to this explanation, the Internet is similar to other passive, nonsocial entertainment activities, such as watching TV, reading, or listening to music. Use of the Internet, like watching TV, may represent a privatization of entertainment, which could lead to social withdrawal and to declines in psychological well-being. Putnam (1995) made a similar claim about television viewing.

The problem with this explanation is that a major use of the Internet is explicitly social. People use the Internet to keep up with family and friends through electronic mail and on-line chats and to make new acquaintances through MUDs, chats, Usenet newsgroups, and listservs. Our previous analyses showed that interpersonal communication was the dominant use of the Internet among the sample studied in this research (Kraut et al., 1998). They used the Internet more frequently for exchanging electronic mail than for surfing the World Wide Web and, within a session, typically checked their mail before looking at the Web; their use of electronic mail was more stable over time than their use of the World Wide Web; and greater use of e-mail relative to the Web led them to use the Internet more intensively and over a longer period (Kraut et al., 1998). Other analyses, not reported here, show that even social uses of the Internet were associated with negative outcomes. For example, greater use of electronic mail was associated with increases in depression.

Displacing strong ties. The paradox we observe, then, is that the Internet is a social technology used for communication with individuals and groups, but it is associated with declines in social involvement and the psychological well-being that goes with social involvement. Perhaps, by using the Internet, people are substituting poorer quality social relationships for better relationships, that is,

substituting weak ties for strong ones (e.g., Granovetter, 1973; Krackhardt, 1994). People can support strong ties electronically. Indeed, interviews with this sample revealed numerous instances in which participants kept up with physically distant parents or siblings, corresponded with children when they went off to college, rediscovered roommates from the past, consoled distant friends who had suffered tragedy, or exchanged messages with high school classmates after school.

However, many of the on-line relationships in our sample, and especially the new ones, represented weak ties rather than strong ones. Examples include a woman who exchanged mittens with a stranger she met on a knitting listserv, a man who exchanged jokes and Scottish trivia with a colleague he met through an on-line tourist website, and an adolescent who exchanged (fictional) stories about his underwater exploits to other members of a scuba diving chat service. A few participants met new people on-line and had friendships with them. For instance, one teenager met his prom date on-line, and another woman met a couple in Canada whom she subsequently visited during her summer vacation. However, interviews with participants in this trial suggest that making new friends on-line was rare. Even though it was welcomed when it occurred, it did not counteract overall declines in real-world communication with family and friends. Our conclusions resonate with Katz and Aspden's (1997) national survey data showing that only 22% of the respondents who had been using the Internet for two or more years had ever made a new friend on the Internet. Although neither we nor Katz and Aspden provide comparison data, we wonder whether, in the real world, only a fifth of the population make a friend over a two-year period.

On-line friendships are likely to be more limited than friendships supported by physical proximity. On-line friends are less likely than friends developed at school, work, church, or in the neighborhood to be available for help with tangible favors, such as offering small loans, rides, or baby-sitting. Because on-line friends are not embedded in the same day-to-day environment, they will be less likely to understand the context for conversation, making discussion more difficult

(Clark, 1996) and rendering support less applicable. Even strong ties maintained at a distance through electronic communication are likely to be different in kind and perhaps diminished in strength compared with strong ties supported by physical proximity (Wellman & Wortley, 1990). Both frequency of contact and the nature of the medium may contribute to this difference. For example, one of our participants who said that she appreciated the e-mail correspondence she had with her college-aged daughter also noted that when her daughter was homesick or depressed, she reverted to telephone calls to provide support. Although a clergyman in the sample used e-mail to exchange sermon ideas with other clergy, he phoned them when he needed advice about negotiating his contract. Like that mother and clergyman, many participants in our sample loved the convenience of the Internet. However, this convenience may induce people to substitute less involving electronic interactions for more involving real-world ones. The clergyman in the sample reported that his involvement with his listserv came at the expense of time with his wife.

Implications for Policy and Design

The negative effects of Internet use that we have documented here are not inevitable. Technologies are not immutable, especially not computing ones. Their effects will be shaped by how they are constructed by engineers, how they are deployed by service providers, and how they are used by consumers. Designing technology and policy to avoid negative outcomes will depend on a more complete understanding of the mechanisms through which use of the Internet influences social involvement and psychological well-being. If we assume, for example, that the negative consequences of using the Internet occur at least partly because people spend more time and attention on weak ties and less time and attention on strong ties, then some design and policy solutions come easily to mind.

Most public policy discussion of the Internet has focused on its potential benefits as an information resource and as a medium for commercial exchange. Research funding also heavily favors the development of better resources for efficient information delivery and retrieval.

Both policy and technology interventions to better support the Internet's uses for interpersonal communication could right this imbalance. For example, recent legislation to limit taxes on the Internet favored the Internet for commercial transactions. There are no comparable policy initiatives to foster use of the Internet as an interpersonal communications medium (see Andersen et al., 1998). At the technological level, services for finding people are far less common, sophisticated, or accurate than services for finding information and products. On-line directories of e-mail addresses are far less comprehensive than on-line directories of telephone numbers. Search services on the Internet, such as Yahoo, Alta Vista, InfoSeek, and Lycos, grew from sophisticated industrial and government-funded research programs in information retrieval. The initiative on digital libraries, funded by the National Science Foundation and the Defense Advanced Research Projects Agency, has a goal of making pictures, graphs, and video images as easy to search and retrieve as text. Comparable search capabilities for finding people based on their attributes are far less well-supported. (See the research on collaborative filtering, e.g., Resnick & Varian, 1997 , for an interesting exception.)

The interpersonal communication applications currently prevalent on the Internet are either neutral toward strong ties or tend to undercut rather than promote them. Because most websites, Usenet news groups, and listservs are topically organized, strangers are encouraged to read each others' messages and exchange communication on the basis of their common interests in soap operas, civil rights, stamp collecting, or other narrow topics. This communication is dominated by the designated topic, and people are frequently discouraged by social pressure from straying from the topic. Although some of these groups are formed explicitly to provide support, and a few even encourage real-world friendships and tangible help, these are relatively few in comparison to the thousands of groups focused on professional advice, hobbies, and entertainment. Information and communication services that are geographically based and designed to support people who already know and care about each

other are even rarer. Some successful experiments at community-based on-line communication do exist (e.g., Carroll & Rosson, 1996) along with some successful commercial services that support preexisting social groups (e.g., "buddy lists" in America OnLine's Instant Messenger product). We believe these are valuable directions.

More intense development and deployment of services that support preexisting communities and strong relationships should be encouraged. Government efforts to wire the nation's schools, for example, should consider on-line homework sessions for students rather than just on-line reference works. The volunteers in churches, synagogues, and community groups building informational websites might discover that tools to support communication among their memberships are more valuable.

Both as a nation and as individual consumers, we must balance the value of the Internet for information, communication, and commerce with its costs. Use of the Internet can be both highly entertaining and useful, but if it causes too much disengagement from real life, it can also be harmful. Until the technology evolves to be more beneficial, people should moderate how much they use the Internet and monitor the uses to which they put it.

References

Andersen, R. E., Crespo, C. J., Bartlett, S. J., Cheskin, L. J. & Pratt, M. (1998). Relationship of physical activity and television watching with body weight and level of fatness among children. *Journal of the American Medical Association, 279,* 938–942.

Anderson, R. H., Bikson,T. K., Law, S. A. & Mitchell, B. M. (1995). *Universal access to e-mail: Feasibility and societal implications.* Santa Monica, CA: Rand Corporation.

Attewell, P. & Rule, J. (1984). Computing and organizations: What we know and what we don't know. *Communication of the ACM, 27,* 1184–1192.

Bell, D. (1973). *The coming of post-industrial society: A venture in social forecasting.* New York: Basic Books.

Bendig, A. W. (1962). The Pittsburgh scales of social extraversion, introversion and emotionality. *The Journal of Psychology, 53,* 199–209.

Beniger, J. R. (1987). Personalization of mass media and the growth of pseudo-community. *Communication Research, 14,* 352–371.

Bentler, P. M. (1995). *EQS: Structural equations program manual.* Encino, CA: Multivariate Software, Inc.

Berry, W. (1993). *Sex, economy, freedom, and community.* New York: Pantheon.

Brody, G. H. (1990, April). Effects of television viewing on family interactions: An observational study. *Family Relations, 29,* 216–220.

Canary, D. J. & Spitzberg, B. H. (1993). Loneliness and media gratification. *Communication Research, 20,* 800–821.

Carroll, J. & Rosson, M. (1996). Developing the Blacksburg electronic village. *Communications of the ACM, 39* (12), 68–74.

Clark, H. H. (1996). *Using language.* New York: Cambridge University Press.

Cohen, J. & Cohen, P. (1983). *Applied multiple regression/correlation analysis for the behavioral sciences.* Hillsdale, NJ: Erlbaum.

Cohen, S., Mermelstein, R., Kamarck, T. & Hoberman, H. (1984). Measuring the functional components of social support. In I. G. Sarason & B. R. Sarason (Eds.), *Social support: Theory, research and applications* (pp. 73–94). The Hague, Holland: Martines Niijhoff.

Cohen, S. & Wills, T. A. (1985). Stress, social support, and the buffering hypothesis. *Psychological Bulletin, 98,* 310–357.

Condry, J. (1993, Winter). Thief of time, unfaithful servant: Television and the American child. *Daedalus, 122,* 259–278.

Constant, D., Sproull, L. & Kiesler, S. (1996). The kindness of strangers: On the usefulness of weak ties for technical advice. *Organization Science, 7,* 119–135.

Danko,W. D. & MacLachlan, J. M. (1983). Research to accelerate the diffusion of a new invention. *Journal of Advertising Research, 23* (3), 39–43.

Fischer, C. S. (1992). *America calling.* Berkeley, CA: University of California Press.

Gove, W. R. & Geerken, M. R. (1977). The effect of children and employment on the mental health of married men and women. *Social Forces, 56,* 66–76.
Granovetter, M. (1973). The strength of weak ties. *American Journal of Sociology, 73,* 1361–1380.
Heim, M. (1992). The erotic ontology of cyberspace. In M. Benedikt (Ed.), *Cyberspace: First steps* (pp. 59–80). Cambridge, MA: MIT Press.
Huston, A. C., Donnersteinf, E., Fairchild, H., Feshbach, N., Katz, P., Murray, J., Rubinstein, E., Wilcox, B. & Zuckerman, D. (1992). *Big world, small screen: The role of television in American society.* Lincoln: University of Nebraska Press.
Jackson-Beeck, M. & Robinson, J. P. (1981). Television nonviewers: An endangered species? *Journal of Consumer Research, 7,* 356–359.
Jacobson, H. B. & Roucek, J. S. (1959). *Automation and society.* New York: Philosophical Library.
Kanner, A. D., Coyne, J. C., Schaefer, C. & Lazarus, R. S. (1981). Comparisons of two modes of stress measurement: Daily hassles and uplifts versus major life events. *Journal of Behavioral Medicine, 4,* 1–39.
Katz, J. E. & Aspden, P. (1997). A nation of strangers? *Communications of the ACM, 40* (12), 81–86.
King, J. L. & Kraemer, K. L. (1995). Information infrastructure, national policy, and global competitiveness. *Information Infrastructure and Policy, 4,* 5–28.
Kohut, A. (1994). *The role of technology in American life.* Los Angeles: Times Mirror Center for the People and the Press.
Krackhardt, D. (1994). The strength of strong ties: The importance of Philos in organizations. In N. Nohria & R. Eccles (Eds.), *Networks and organizations: Structure, form, and action.* Boston, MA: Harvard Business School Press.
Kraut, R., Mukhopadhyay, T., Szczypula, J., Kiesler, S. & Scherlis, W. (1998). Communication and information: Alternative uses of the Internet in households. *In Proceedings of the CHI 98* (pp. 368–383). New York: ACM.

Kraut, R., Scherlis, W., Mukhopadhyay, T., Manning, J. & Kiesler, S. (1996). The HomeNet field trial of residential Internet services. *Communications of the ACM, 39,* 55–63.

Kubey, R. & Csikszentmihalyi, M. (1990). *Television and the quality of life: How viewing shapes everyday experience.* Hillsdale, NJ: Erlbaum.

Leavitt, H. J. & Whisler, T. L. (1958, November–December). Management in the 1980s. *Harvard Business Review, 36,* 41–48.

Lundmark, V., Kiesler, S., Kraut, R., Scherlis, W. & Mukhopadhyay, T. (1998). *How the strong survive: Patterns and significance of competence, commitment, and requests for external technical support in families on the Internet.* Unpublished manuscript.

Maccoby, E. E. (1951). Television: its impact on school children. *Public Opinion Quarterly, 15,* 421–444.

McLuhan, M. (1964). *Understanding media.* New York: McGraw-Hill.

Murray, J. P. & Kippax, S. (1978). Children's social behavior in three towns with differing television experience. *Journal of Communication, 28,* 18–29.

Neuman, S. B. (1991). *Literacy in the television age: The myth of the TV effect.* Norwood, NJ: Ablex.

Parks, M. R. & Floyd, K. (1995, month day). Making friends in cyberspace. *Online Journal of Computer Mediated Communication, 1* (4). Available:

Putnam, R. (1995, January). Bowling alone: America's declining social capital. *Journal of Democracy, 6,* 65–78.

Radloff, L. (1977). The CES–D Scale: A self-report depression scale for research in the general population. *Applied Psychological Measurement, 1,* 385–401.

Resnick, P. & Varian, H. (1997). Recommender systems: Introduction to the special section. *Communications of the ACM, 40* (3), 56–58.

Rheingold, H. (1993). *The virtual community: Homesteading on the electronic frontier.* Reading, MA: Addison Wesley.

Robinson, J. P. (1990). Television's effects on families' use of time. In J. Bryant (Ed.), *Television and the American family* (pp. 195–209). Hillsdale, NJ: Erlbaum.

Robinson, J. P. & Godbey, G. (1997). *Time for life: The surprising ways Americans use their time.* University Park: The Pennsylvania State University Press.

Rook, K. S. & Peplau, L. A. (1982). Perspectives on helping the lonely. In L. A. Peplau & D. Perlman (Eds.), *Loneliness: A sourcebook of current theory, research and therapy* (pp. 351–378). New York: Wiley.

Rubinstein, C. & Shaver, P. (1982). *In search of intimacy.* New York: Delcorte.

Russell, D., Peplau, L. & Cutrona, C. (1980). The revised UCLA loneliness scale: Concurrent and discriminant validity evidence. *Journal of Personality and Social Psychology, 39,* 472–480.

Short, J., Williams, E. & Christie, B. (1976). *The social psychology of telecommunications.* London: Wiley.

Sidney, S., Sternfeld, B., Haskell, W. L., Jacobs, D. R., Chesney, M. A. & Hulley, S. B. (1998). Television viewing and cardiovascular risk factors in young adults: The CARDIA study. *Annals of Epidemiology, 6* (2), 154–159.

Sproull, L. & Faraj, S. (1995). Atheism, sex, and databases: The Net as a social technology. In B. Kahin & J. Keller (Eds.), *Public access to the Internet* (pp. 62–81). Cambridge, MA: MIT Press.

Sproull, L. & Kiesler, S. (1991). *Connections: New ways of working in the networked organization.* Cambridge, MA: MIT Press.

Stoll, C. (1995). *Silicon snake oil.* New York: Doubleday.

Turkle, S. (1996, Winter). Virtuality and its discontents: Searching for community in cyberspace. *The American Prospect, 24,* 50–57.

Vitalari, N. P., Venkatesh, A. & Gronhaug, K. (1985). Computing in the home: Shifts in the time allocation patterns of households. *Communications of the ACM, 28* (5), 512–522.

Walther, J. B., Anderson, J. F. & Park, D. (1994). Interpersonal effects in computer-mediated interaction: A meta-analysis of social and anti-social communication. *Communication Research, 21,* 460–487.

Wellman, B. & Wortley, S. (1990). Different strokes for different folks: Community ties and social support. *American Journal of Sociology, 96,* 558–588.

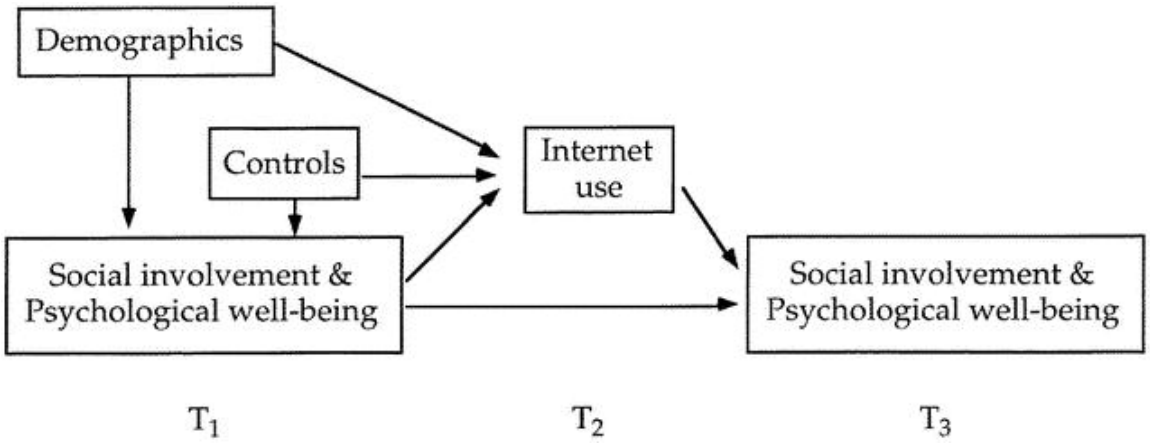

Figure 1. Logic of Social Impact Analyses

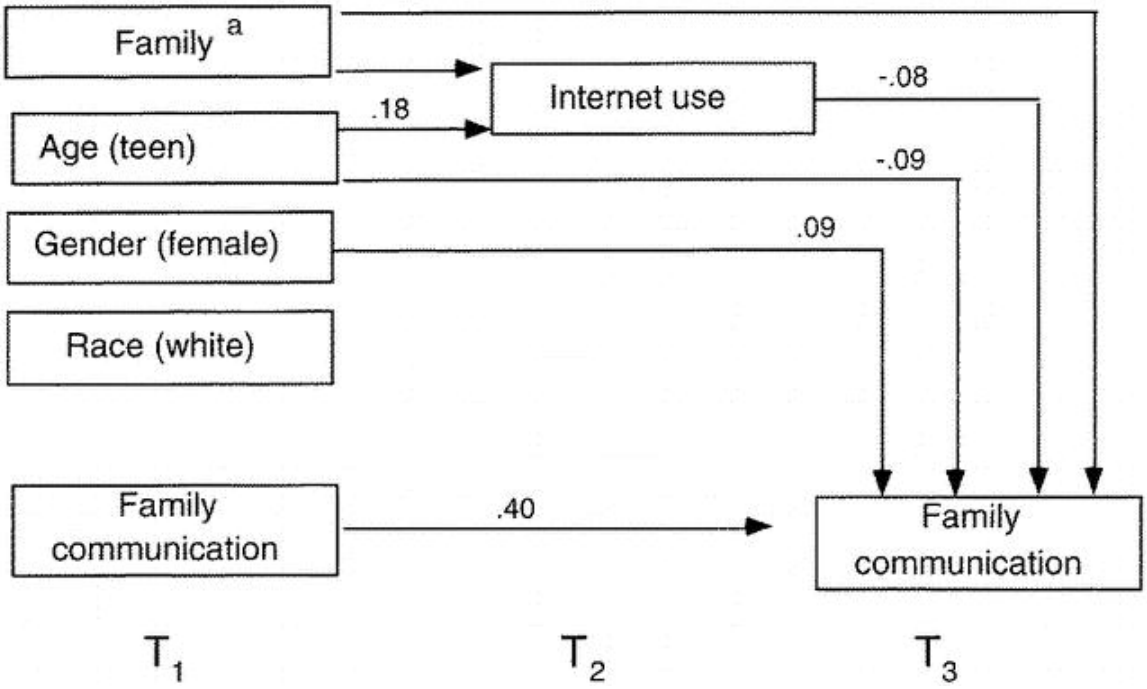

Figure 2. Influence of Internet Use on Family Communication

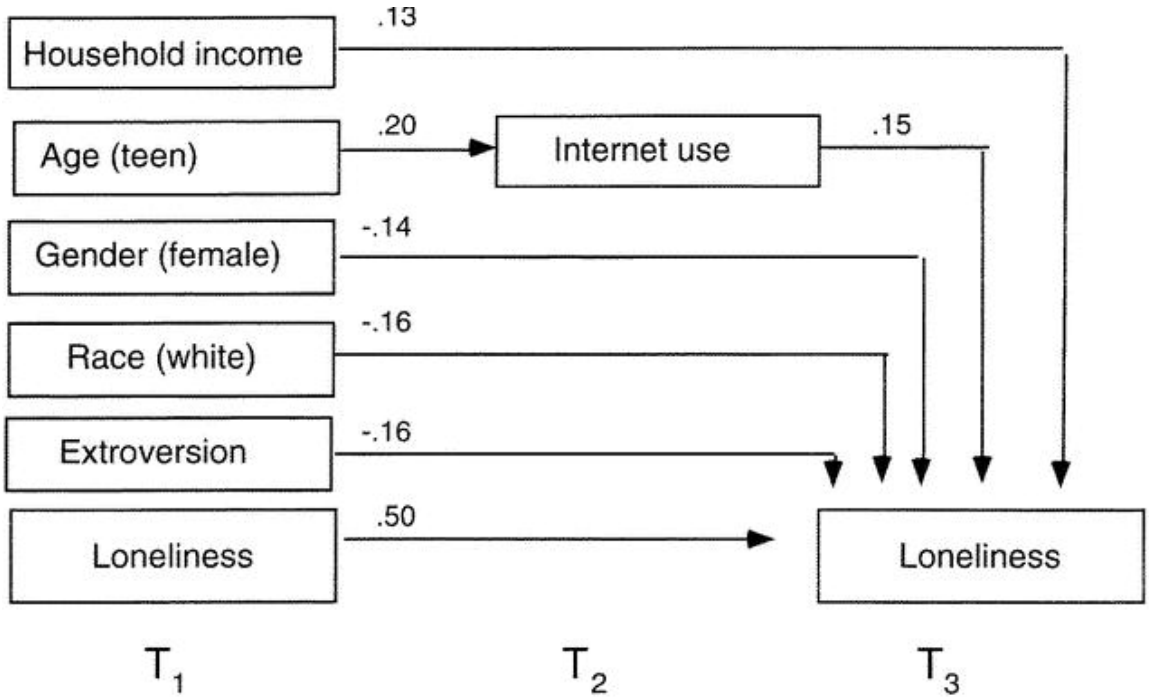

Figure 3. Influence of Internet Use on Loneliness

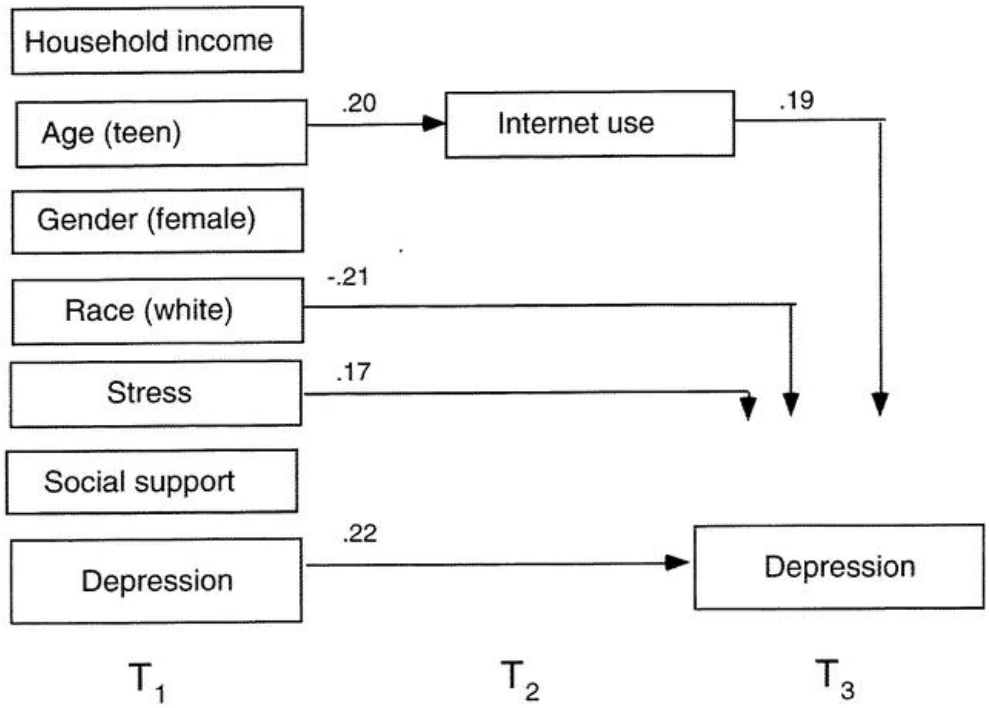

Figure 4. Influence of Internet Use on Depression

Table 1
Description of the Sample

Variable	*N*	*M*	*SD*
Household income (dollars in thousands)	164	54.46	22.79
Race (White = 1, minority = 0)	167	0.75	0.43
Age (teen = 1, adult = 0)	169	0.28	0.45
Gender (female = 1, male = 0)	169	0.56	0.50
Social extraversion (1–5 scale)	169	3.66	0.80
Household size (individuals in household at pretest)	231	4.08	1.02
Family communication T1 (mean hours per day)	231	4.29	2.67
Family communication T3 (mean hours per day)	231	4.51	2.65
Local social network T1 (number of people)	166	23.94	17.87
Local social network T3 (number of people)	166	22.90	16.58
Distant social network T1 (number of people)	166	25.43	27.30
Distant social network T3 (number of people)	166	31.73	31.04
Social support T1 (1–5 scale, 16 items)	164	3.97	0.51
Social support T3 (1–5 scale, 16 items)	166	3.97	0.56
Loneliness T1 (1–5-point scale, 3 items)	165	1.99	0.71
Loneliness T3 (1–5-point scale, 3 items)	163	1.89	0.73
Stress T1 (mean of hassles reported of 49 items)	169	0.23	0.15
Stress T3 (mean of hassles reported of 49 items)	169	0.23	0.17
Depression T1 (0–3 scale, 15 items)	167	0.73	0.49
Depression T3 (0–3 scale, 15 items)	164	0.62	0.46
Internet usage T2 (mean hours per week)	169	2.43	4.94

Note. The units of the means and standard deviations for Internet hours and family communication are weekly hours.

Table 1

Table 2
Correlations Among Variables

Variable	1	2	3	4	5	6	7	8	9	10	11	12	13	14	15	16	17	18	19	20	21
1. Household income (dollars in thousands)	—																				
2. Race (White = 1, minority = 0)	.28	—																			
3. Age (teen = 1, adult = 0)	−.03	.08	—																		
4. Gender (female = 1, male = 0)	−.14	−.20	.03	—																	
5. Social extraversion (1–5 scale)	.11	.00	.12	.19	—																
6. Household size (people in household at pretest)	.27	.16	.16	−.07	.17	—															
7. Family communication T1 (mean hours per day)	−.14	−.01	−.07	.18	.09	.28	—														
8. Family communication T3 (mean hours per day)	−.03	−.10	−.28	.14	−.09	.01	.40	—													
9. Local social network T1 (number of people)	−.05	−.02	.27	.03	.07	.13	.09	.01	—												
10. Local social network T3 (number of people)	−.06	−.02	.24	.04	.12	.17	.20	.01	.56	—											
11. Distant social network T1 (number of people)	.14	.14	.02	.02	.06	.00	.09	.01	.30	.17	—										
12. Distant social network T3 (number of people)	.18	.27	.16	−.17	.06	.07	.06	.03	.16	.36	.38	—									
13. Social support T1 (1–5 scale, 16 items)	.12	.05	.05	.22	.34	.04	.25	.05	.16	.08	.06	.10	—								
14. Social support T3 (1–5 scale, 16 items)	.14	.13	.05	.18	.30	.14	.12	.04	.10	.14	.19	.13	.57	—							
15. Loneliness T1 (1–5 scale, 3 items)	−.09	−.07	−.18	−.08	−.37	−.12	−.25	−.10	−.21	−.19	−.08	−.18	−.61	−.48	—						
16. Loneliness T3 (1–5 scale, 3 items)	.07	−.08	−.05	−.21	−.36	−.07	−.15	−.05	−.30	−.23	−.15	−.12	−.49	−.67	.55	—					
17. Stress T1 (mean of hassles reported of 49 items)	−.01	−.01	−.15	.09	.04	.07	.06	.10	.03	.00	.07	−.09	−.08	−.01	.13	.09	—				
18. Stress T3 (mean of hassles reported of 49 items)	−.02	.13	.01	.05	.01	−.01	−.05	−.03	.07	.06	.00	.08	−.09	.10	.05	.01	.60	—			
19. Depression T1 (0–3 scale, 15 items)	.07	.05	.33	.10	−.14	.14	−.07	.03	.16	.12	.04	.08	−.26	−.12	.22	.24	.37	.30	—		
20. Depression T3 (0–3 scale, 15 items)	−.07	−.15	.14	.03	.00	−.06	−.08	−.20	−.07	−.06	−.13	−.11	−.12	−.36	.25	.36	.21	.31	.32	—	
21. Internet usage T2 (mean hours per week)	.06	.17	.23	−.07	−.10	−.07	−.09	−.08	−.07	−.11	−.08	−.05	−.01	−.04	−.09	.15	−.14	.04	.07	.15	—

Note. *N* for household size and family communication = 231. Other *N*s vary between 163 and 169. Family communication, social networks, and Internet use have been logged before computing correlations. When $r = .15$, $p = .05$; when $r = .17$, $p = .025$; when $r = .20$, $p = .01$.

Table 2

Table 3
Effects of the Internet on Social Involvement and Psychological Well-being

	Model 1		Model 2		Model 3		Model 4		Model 5		Model 6		Model 7	
Independent variable	Internet hours	Family communication, T3	Internet hours	Local social Circle, T3	Internet hours	Distant social circle, T3	Internet hours	Social support, T3	Internet hours	Loneliness, T3	Internet hours	Stress, T3	Internet hours	Depression, T3
Intercept	−.17	.00	.00	−.03	−.01	−.03	−.01	−.02	.00	.02	.00	−.01	−.01	.03
Household income (dollars in thousands)			.05	−.01	.06	.08	.04	.07	.04	.13†	.02	−.06	−.01	−.04
Race (White = 1, minority = 0)	.02	.10	.14	.03	.16†	.19	.12	.11	.12	−.16*	.15	.11	.12	−.21*
Age (teen = 1, adult = 0)	.18**	−.09*	.25**	.10	.21**	.13†	.23*	.00	.20**	.02	.18*	.07	.15	.09
Gender (female = 1, male = 0)	−.01	.09*	.01	.06	.02	−.11	−.01	.07	.00	−.14*	−.01	.01	−.02	−.03
Social extraversion (5-point scale)			−.16*	.03	−.16*	−.03	−.18*	.09	−.20	−.16*				
Family		—a***												
Family communication T1 (mean hours per day)	.15	.40***												
Local social circle T1 (number of people)			−.14†	.53***										
Distant social circle T1 (number of people)					−.12	.33***								
Social support T1 (5-point scale, 16 items)							.04	.51***					.01	−.03
Loneliness T1 (5-pont scale, 3 items)									−.11	.50***				
Stress T1 (mean of hassles reported of 49 items)											−.11	.65***	−.13	.17†
Depression T1 (0–3 scale, 15 items)													.06	.22*
Internet usage (mean hours per week)		−.08*		−.14*		−.14†		−.05		.15*		.11†		.19*
R^2	.42	.84	.10	.34	.10	.09	.09	.35	.10	.38	.08	.41	.07	.19
N	231	231	158	155	158	156	156	152	157	152	161	161	155	150

Note. Entries are standardized beta coefficients from ordinary least squares regressions. T1 = time 1; T3 = time 3.
a Family was represented by 72 dummy variables differentiating the unique families, and therefore does not have a single estimate.
† $p < .10$ (marginally significant). * $p < .05$. ** $p < .01$. *** $p < .001$.

Table 3